Installation, Operation & Maintenance Instructions Manual

MFH Portable Air Warmer

Contents

EXHEAT Industrial can provide versions of this manual in German, French, Italian, Spanish, Portuguese, Polish, Chinese and Russian. These versions can be requested at support@exheat-industrial.com

To maintain the equipment warranty and, if applicable, the Hazardous Area Certification, the instructions contained within this manual must be complied with in full.

Fitting any other device invalidates the hazardous area certification.

1. Contact Details

Sales Enquiries

EXHEAT Industrial Ltd

Threxton House
Threxton Road Industrial Estate
Watton, Thetford
Norfolk, IP25 6NG

Tel: +44 (0) 1953 886 210

Fax: +44 (0) 1953 883 853

Email: sales@exheat-industrial.com
Website: www.exheat-industrial.com

Technical Support

EXHEAT Industrial Ltd

Threxton House
Threxton Road Industrial Estate
Watton, Thetford
Norfolk, IP25 6NG

Tel: +44 (0) 1953 886 269

Fax: +44 (0) 1953 883 853

Email: support@exheat-industrial.com
Website: www.exheat-industrial.com

2. Description of Equipment

This MFH portable fan heater range offers a compact high capacity air heating solution that is suitable for small and medium sized premises, and is designed for flexibility, allowing it to be supplied according to our clients' capacity and power supply requirements.

<table>
<tr><td rowspan="3">Certification</td><td colspan="4">The full range of MFH portable fan heaters are supplied with both ATEX and IECEx certification.</td></tr>
<tr><td colspan="2">ATEX</td><td colspan="2">IECEx</td></tr>
<tr><td colspan="2">Ex II 2 G D Ex h
Ex db eb IIB+H2 T3-T4 Gb
Ex tb IIIC T200°C – T135°C Db
Certificate No:
ITS 17 ATEX 101743 X</td><td colspan="2">Ex db eb IIB+H2 T3-T4 Gb
Ex tb IIIC T200°C – T135°C Db

Certificate No:
IECEx ITS 17.0012 X</td></tr>
<tr><td rowspan="6">The Heater Range</td><td colspan="2">MFH T4</td><td colspan="2">MFH T3</td></tr>
<tr><td>Voltage</td><td>Duty</td><td>Voltage</td><td>Duty</td></tr>
<tr><td>110</td><td>2.5kW</td><td rowspan="2">220
240
380
415</td><td rowspan="2">5.5kW</td></tr>
<tr><td>220
240
380
415</td><td>2.75kW</td></tr>
<tr><td>120
230
254
277
400
440
480</td><td>3kW</td><td rowspan="2">230
254
277
400
440
480
600
690</td><td rowspan="2">6kW</td></tr>
<tr><td>600
690</td><td>3.7kW</td></tr>
<tr><td colspan="5">The model number is defined as MFH-Duty-Voltage. E.g. MFH-5.5-415</td></tr>
<tr><td rowspan="6">Performance Data</td><td></td><td colspan="2">50 Hz</td><td colspan="2">60 Hz</td></tr>
<tr><td>Air Flow</td><td colspan="2">1050 m³/hr</td><td colspan="2">1260 m³/hr</td></tr>
<tr><td>Face Air Velocity</td><td colspan="2">3.6 m/s</td><td colspan="2">4.3 m/s</td></tr>
<tr><td>Fan Speed</td><td colspan="2">1380 rpm</td><td colspan="2">1460 rpm</td></tr>
<tr><td>Motor Rating</td><td colspan="2">0.09 kW</td><td colspan="2">0.09 kW</td></tr>
<tr><td>T Delta</td><td colspan="2">T3 – up to 18°C
T4 – up to 10°C</td><td colspan="2">T3 – up to 15°C
T4 – up to 9°C</td></tr>
<tr><td rowspan="2">Specifications</td><td>Dimensions</td><td>Length: 475mm
Width: 470mm
Height: 530mm</td><td>Packing</td><td>Length: 480
Width: 480
Height: 540</td></tr>
<tr><td>Weight
(Heater only)</td><td>28kg</td><td>Incl. Packing
(Box)</td><td>30kg</td></tr>
</table>

Materials of Construction	Casing	Aliphatic Polyamide (PA66) with EMI shielding offering excellent resistance to Hydrocarbons
	Flameproof Enclosure	Hard Anodised Aluminium offering great corrosion and wear resistance suitable for both onshore and offshore applications.
	Increased Safety Enclosure	Stainless Steel fitted with Silicone Sponge gaskets.
	Heating Elements	Stainless Steel sheathed tubular element with fully brazed individual stainless steel fins.
	Motor Housing	Epoxy Coated Aluminium suitable for both onshore and offshore applications.
	Impeller	Epoxy Coated Aluminium hub Aliphatic Polyamide (PA66) with EMI shielding
	Fasteners	Stainless Steel Gr. A4-70
	Optional Isolator	Epoxy Coated Aluminium
Other information	Ingress Protection	IP65
	Applicable Standards	EN IEC 60079-0 EN IEC 60079-1 EN IEC 60079-7 EN IEC 60079-31 EN 80079-36 EN 80079-37 EN 14986

Solid Obstacles

- Where the design of the MFH does not comply with table 11 of EN IEC 60079-1 15.3.1 listing minimum distance between flanged flamepath and obstruction, additional testing has been completed successfully. The minimum permissible obstruction to the flanged flamepath is 0.89mm.

3. Preservation and Storage Instructions

- Do not remove the heater from its packing until you are ready to assemble and operate it for the first time.
- After use, store the equipment in an inside location that is dry, clean and well ventilated.
- Always allow the heater to cool (approx. 20min) before moving it to operate in another location, transport or store.
- Suitable preservation materials, such as silica gel bags or equivalent, have been placed inside the packaging and inside the enclosure. Additionally, spare silica gel bags, or equivalent, can be purchased by contacting EXHEAT Industrial Ltd.

CAUTION – The following preservation instructions must be adhered to, failure to do so could result in the equipment warranty being invalidated:

- Store the equipment at between 0°C and +40°C.
- Do not store the equipment for more than 3 months unless packed for long term storage.
- If the equipment is stored beyond 3 months, ensure that preservation materials are inspected and replaced if required.

CAUTION – It is the client's responsibility to ensure that, if the terminal enclosure is opened prior to installation; when refitting the terminal enclosure lid please ensure the gaskets are not damaged or moved in any way, please refer to section 5.

- Protect the equipment against additional external sources of vibration and/or impact.
- All fasteners are made from Stainless Steel Gr. 316 to prevent corrosion.

4. Pre-installation Instructions

Unpacking

- Carefully remove the packaging from each product and check for damage. Immediately report any damage to EXHEAT Industrial Ltd (please keep this IOM and the additional certification booklet for future reference).
- Remove the heater using the handle provided and place on the ground, remove any optional extras from the box and discard the packaging responsibly.
- Visually inspect the heater casing for damage. Again, report any damage to EXHEAT Industrial Ltd straight away.
- Carefully lift the heater onto a bench or workspace then gently lay the heater on its side to gain access to the enclosures underneath.

Before carrying out the following inspections, ensure no attempt is made to connect a power supply to the heater. The following instructions may only be completed while the heater is completely isolated from a source of power.

Pre-Installation Inspection

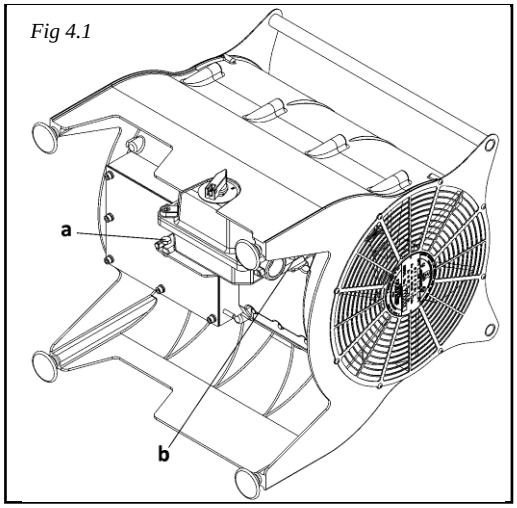

Fig 4.1

- Each heater is manufactured to the highest standard with great care and quality materials. All the goods are thoroughly inspected and tested before leaving the manufacturing plant, and they must be handled with care during storage and installation.
- Carefully lay the fan heater on its side with the side entry into the casing facing up.
- If fitted with an optional local isolator, carefully remove fixing (a.) and loosen fixing (b.) and slide the enclosure housing towards you. See Fig 4.1. Rotate so as not to apply any additional stress on the cable and set down. See Fig 4.2.

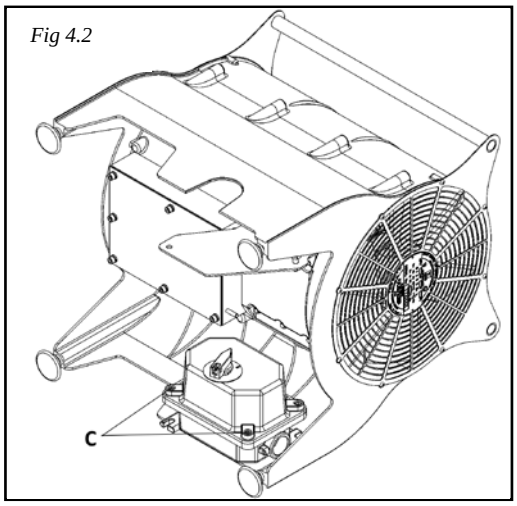

Fig 4.2

- Remove the four fasteners (c.) and carefully place the lid to one side so as not to damage the flamepath.
- Carefully remove the seven fasteners (d.) on the stainless steel enclosure and remove the lid. See Fig 4.3.
- If not fitted with an optional local isolator, remove the seven fasteners (d.) on the stainless steel enclosure and remove the lid.

Be careful when removing the fasteners. Failure to replace all correctly prior to use shall invalidate the certification.

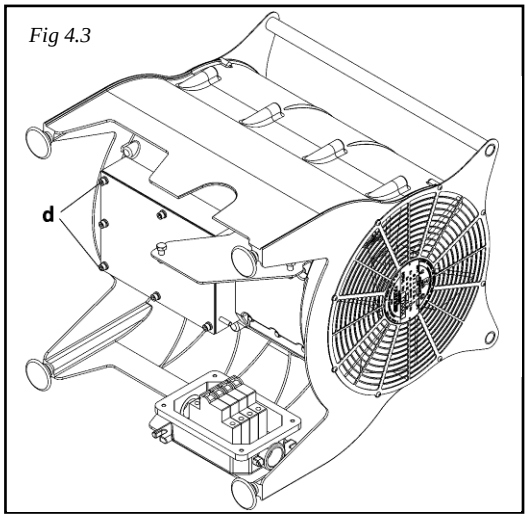

Fig 4.3

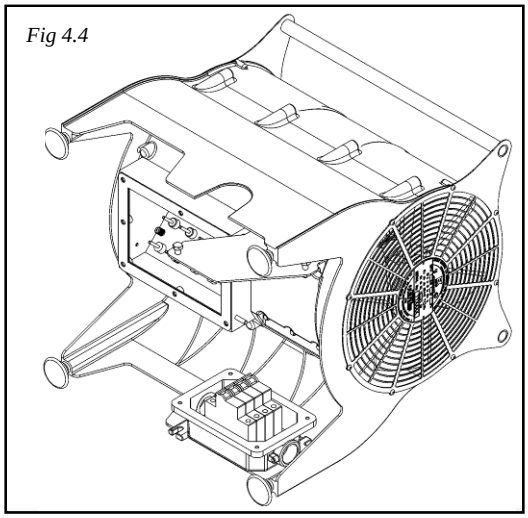
Fig 4.4

- Before the installation starts it is advised that the product is checked to ensure the insulation resistance reading is above 2MΩ for the heater when tested at no less than 500 volts dc. To do this, connect the neutral cable (generally black) to any part of the steel enclosure, connect the live (generally red) cable to any power terminal and test for a minimum of 30 seconds.
- Should the product fail this test, please contact the technical help via our website:

  www.exheat-industrial.com/contact/support
- Before connecting any supply cables, ensure that the incoming power supply conforms to the specified voltage on the products nameplate at a nominal variance of +/- 5% of the specified voltage.

Compliance with these instructions is a warranty requirement. Documented evidence must be maintained in the form of a signed checklist. Copies of completed checklists and records will be required in the event of any warranty claim.

CAUTION – Check the voltage and current of the heater to ensure it is compatible with the ratings of the supply before energising.

Power Supply

- Only appropriately sized SWA cable can be used on this heater. The cable must also satisfy the relevant clauses of IEC/EN 60079-14 / Installation requirements.
- The heater supply may derive from;
  - suitably rated plug socket,
  - suitably rated enclosure with local isolation,
  - fixed installation, must be isolatable.

5. Installation Instructions

Should deviation from original design parameters occur, or change of original design structure be required, please refer back to EXHEAT Industrial Ltd for consultation prior to installation.

- Refer to the relevant code of practice for the equipment:

  IEC/EN 60079-14 for selection and installation or the relevant global equivalent.

  IEC/EN 60079-17 for inspection and maintenance of electric apparatus for use in potentially explosive atmospheres or the relevant global equivalent.
- Ensure all pre-installation instructions have been undertaken and that the relevant documentation has been completed. Failure to do so will invalidate the warranty.
- Ensure that person(s) are suitably competent and authorised to install the equipment into a hazardous location.
- Ensure the power supply cable is fully isolated from the power source for the duration of the installation.
- Before operating the equipment, have the installation approved by the site authorised person who is responsible to ensure that the installed system is safe for operation
- Ensure compliance with any instructions and information provided in this manual and on the drawings/certification supplied, also be aware of any additional warning that may be present on the product on any warning labels.
- At no time is the ambient temperature to be allowed to rise above the heaters certified limit, please check the sales literature and certification for this ambient range.
- Before energising the product, ensure that the power supply conforms to the specified voltage on the products nameplate at a nominal variance of +/- 5% of the specified voltage.
- No additional cable entries are to be made within the terminal box. Only EXHEAT Industrial Ltd. can facilitate this.

No alterations are permitted to the factory installed wiring.

It is the user's responsibility to ensure that safe systems of work are used by all personnel operating and maintaining the equipment, including testing when 'live'.

If there is any uncertainty about these points, contact EXHEAT Industrial Ltd for advice.

Failure to comply could result in the Hazardous Area Certificate being invalidated.

Electrical Supply Connection with Optional Local Isolator fitted.

- Refer to the wiring diagram in Section 12.
- Cable entry to the optional local isolator is via 1 off pre drilled M32x1.5p hole and fitted with a temporary plastic plug. Remove the plug and install the cable and gland as per manufacturer's instructions.
- Connect the Live connection(s), Neutral and Earth in accordance with the appropriate wiring diagram in Section 12.
- The Live and Neutral connections to the heaters are made using the installed terminals and by the use of proprietary ferrule crimps (client supplied). The isolator can accept a maximum cable size of 25mm². Torque to 2N.m.
- Optionally, the external earth connection is made by use of proprietary ring crimps to suit an M6 fixing and to suit the size of cable installed. This is found adjacent to the cable entries.
- With the connections made, replace the enclosure lids securely with all fasteners.
- When replacing the Isolator, ensure the cable is looped around the bracket to prevent snagging.

DO NOT ENERGISE THE HEATER AT THIS TIME

Electrical Supply Connection without Optional Local Isolator fitted.

- Refer to the wiring diagram in Section 12.
- Cable entry to the main terminal enclosure is via 1 off M20 Certified cable gland (not supplied).
- Connect the live connection(s), neutral and earth in accordance with the appropriate wiring diagram in Section 12.
- The live and neutral connections to the heaters are made using the installed terminals and by the use of proprietary ferrule crimps (client supplied). The terminals can accept a maximum cable size of 10mm² and must be tightened to 1.2N.m min / 1.9N.m max.
- Optionally, the external earth connection is made by use of proprietary ring crimps to suit an M6 fixing and to suit the size of cable installed. This is found adjacent to the cable entries.
- With the connections made, replace the enclosure lids securely with all fasteners to 5N.m min.

DO NOT ENERGISE THE HEATER AT THIS TIME

Ensure that the connections are made in accordance with site philosophy. If using ferrules, a minimum of 5.5mm must be engaged within the terminals. If using multi-stranded cable, the stripping length should be 12mm. No modification to allow other connections is permitted.

General Installation Instructions

With the power supply cable connected please complete these remaining instructions before energising.

- Place the heater on its feet in the desired operational location and make further minor adjustments to each foot as required in order to prevent the heater from rocking. Failure to do so could cause damage to the heater.
- Ensure the distance between the Isolator and the ground is at least 40mm at all times.
- The installer and the end user shall ensure that the unit has free and unrestricted air flow to allow natural convection to occur at all times. DO NOT COVER the heater and do not allow anything to rest on or against it when in operation.

Terminate / connect the power supply end of the power cable to the isolated power supply or a certified plug as required.

Warnings

- No additional cable entries are to be made within the terminal box. Only EXHEAT Industrial Ltd. can facilitate this.
- No alterations are permitted to the factory installed wiring.
- The cable glands installed to the MFH heater should be such that they do not decrease the IIB + H2 rating of the heater. All cable glands are to be suitable for the rating and size of the supply cables. IP washers are to be used where applicable.
- Before connection ensure that the supply corresponds with that specified on the nameplate label, and that the sizes and types of cables to be used are suitably rated for the load and temperature of the product.
- Each heater circuit must be protected by a suitably rated over current device and earth leakage circuit breaker device. See below for earth connection details.
- The covers of the MFH range terminal boxes are removed by simply un-bolting the lid fittings. When re-fitting ensure that any gasket seal is in good condition and correctly located. The main cover mating faces **MUST** be kept clean and free from any debris at all times.
- The installer or end user must connect to the EXHEAT Industrial Ltd designated terminals within the terminal box - DO NOT disturb factory fitted wiring.

Earth Connections

WARNING – These heaters MUST BE EARTHED.

- When fitted with the optional local isolator, the Client internal earth cable connection on the MFH heater is inside the Isolator Enclosure. Connection is made by the use of an M6 earth bolt (fitted) with proprietary cable ring crimp (Client supplied). Maximum cable size is 25mm².
- When not fitted with the optional local isolator, the Client internal earth cable connection on the MFH heater is inside the terminal enclosure. Connection is made by the use of a ferrule crimp (Client supplied) connected to the Earth terminal provided. Maximum cable size is 10mm², if larger cable is required, an optional local isolator must be fitted.
- The minimum External Earth conductor size permitted is 4mm². The external earth is made on the M6 stud on the Ex e enclosure, or optionally on the Isolator bracket fixings (when fitted)

Earth-fault Protection

For safety reasons, it is essential to limit the magnitude and duration of earth-fault currents. It is impractical to cover all possible systems, however note that, regardless of which system is used, the product must be protected by a suitable device wired to shut down the product if the thermostat fails to earth. Suitable devices include a residual current device (RCD) – this is the preferred method and should be used whenever possible – or an insulation monitoring device.

- Maximum recommended setting for the RCD: 100mA/10mS. The duration time of 10mS (ten milliseconds) ensures that any fault is detected within a single cycle of a thyristor system (where applicable).
- Maximum recommended setting for the insulation monitoring device: Insulation resistance is not greater than 50 ohms per volt of rated voltage.

Ensure that the equipment is earthed in accordance with the plant earthing philosophy.

If fitted, an anti-condensation heater must be protected by a 30mA earth leakage circuit breaker.

Before commissioning the equipment, the completed installation should be approved by an authorised & competent person to ensure that it has been carried out correctly and that the system is safe for commissioning.
Before switching the thermostat circuit on, check that all the relevant requirements, and any special conditions of safe use have been adhered to, including any additional warning labels that may be present on the product itself.

6. Operating Instructions

General

Electrical equipment must be designed, tested and installed such that, when it is used correctly, health and safety risks are kept to a minimum. The user must be provided with information about any necessary safety conditions, warned of any possible hazards that may arise during normal operation and told how to avoid them.

The user must ensure that the following is adhered to:

- Any employees working on the equipment are authorised & competent in the proper working procedures in order to ensure safety. The plant must be maintained in a safe condition.
- The heater terminal enclosure covers are not to be removed whilst any precipitation, airborne dust or moisture is in the vicinity or when grinding, welding or similar activities are taking place nearby.
- The heater terminal enclosure covers are not to be removed whilst the heater is energised.
- Ensure that all protective packaging is removed carefully and visually inspect product for any transit damage.
- The heaters must be handled with care and stored in clean and dry conditions, as per section 3.
- All prevailing rules, regulations and bylaws in force at the time and place of installation must be observed.
- The heater should be checked for standing stability, adjustments to the feet should only be made whilst the heater is de-energised.
- All terminal connections made by the installer must be checked for tightness before energising.
- Refer to the relevant code of practice for the equipment:
    - IEC/EN 60079-14 for selection and installation or the relevant global equivalent.
    - IEC/EN 60079-17 for inspection and maintenance of electric apparatus for use in potentially explosive atmospheres or the relevant global equivalent.
- Precautions must be taken to prevent damage to the cable entries and mating surfaces of the explosionproof enclosure. Report any damage to EXHEAT Industrial Ltd as flamepaths are no intended to be repaired.
- Ensure that any special conditions for safe use detailed on the Hazardous Area Certification are complied with (see additional certification booklet supplied with this product).
- Any modification not carried out by EXHEAT Industrial Ltd will invalidate certification and warranty.

CAUTION – There is the potential for electrostatic discharge and as such, painted surfaces should only be cleaned with a damp cloth.

Operating Instructions

- The heater is to be used to raise the temperature within a room or local area, by operating at its rated voltage and duty when required.
- Do not energise the heater until you have completed all steps of section 4 and 5 of this manual.
- To operate the heater, simply ensure the power is connected and turn the applicable isolator to the on position.
- The isolator shall be either:
    - Local to the heater, when fitted with the optional local isolator
    - On the wall socket receptacle when fitted with a certified plug
    - At the wall mounted enclosure when hard wired to the supply.

When energising, check that the fan has started to rotate and that air flow is in the correct direction (See General Arrangement Drawings). If either is incorrect de-energise the heater immediately and look at Section 9 to correct the fault.

- Once installed and the power is energised, no adjustments to the heater are allowed.
- The MFH portable fan heater is designed to operate in ambient temperature range of -40°C to +40°C and the user must ensure that this maximum ambient temperature is not exceeded at any time whilst in operation.
- Ensure that while in operation, the air flow is not restricted at either the inlet or outlet of the heater.
- When no longer required, de-energise the heater and allow to cool.
- Allow the heater to stand for 5 minutes minimum if repositioning locally, otherwise allow 20 minutes to cool before moving fully, transporting or storing.
- The heater is fitted with an over-temperature protection circuit. To reset this you must isolate and disconnect fully from the power supply and allow to cool prior to resetting. To reset the over-temperature protection device:
    - Remove the fan guard furthest from the impeller,
    - Remove the 6 fasteners on the Ex d enclosure lid, and gently slide out the control rail which is directly mounted to this lid.
    - Switch the MCB to the closed position,
    - Carefully slide the lid and rail back in, do not use excessive force as this could damage the internal cabling,
    - Replace all fasteners for the lid and fan guard.

7. Maintenance Instructions

General Safety Precautions

The user must ensure that maintenance, installations, commissioning and testing of the equipment is only carried out by authorised and competent persons.

The following rules must be adhered to:

- All prevailing site safety regulations shall be adhered to at all times.
- Check for hazardous gases before and during any maintenance activity.
- Fully isolate the equipment from the electrical supply before and whilst any work is being performed.
- Before starting maintenance work, isolate the equipment completely where possible.
- Before removing the terminal enclosure, allow sufficient time for the internal components to cool down after electrical isolation.
- Do not work on the equipment when it is energised.
- Be aware of hazards which may arise when working on energised equipment, and take all necessary precautions.
- Familiarise all persons working on the equipment with the instructions and information provided within this manual.

The following preventative maintenance should be carried out at the intervals shown below, for any replacement parts, please contact EXHEAT Industrial Ltd.

Compliance with these maintenance instructions is a mandatory requirement. Documented evidence must be maintained in the form of a signed checklist. Copies of completed checklists and records will be required in the event of a warranty claim.

If the heaters are not used for more than three months they must be tested for insulation resistance before being energised.

Motor

- Maintenance shall be performed only by qualified people in accordance with the IEC/EN 60079-17 or national standards (latest edition).
- Qualified people must have knowledge about electrical apparatus for explosive atmospheres and electrical installations in hazardous areas.
- Every 3000 hours of service verify and restore, if necessary, the grease on the radial seals (for example the V-rings)
- Periodically (depending on environment and duty) verify:
    - Motor cleanliness and free passage of cool air;
    - Free motor running with low vibration and absence of anomalous noises, where there is high vibration and/or noise, verify the motor fastenings, balance and that the bearings are in good condition.

Every Use

- Generally inspect the equipment for external damage or signs of deterioration.
- Ensure that the product is clear of obstruction and that the airflow remains unrestricted.
- Check the fan guards, impeller and heating elements for any residual dust build up. Anything noted must be removed with a damp cloth.
- Check the impeller blades for signs of damage, and that there is at least 2mm of clearance to the casing and the guard. Any damage should be reported to EXHEAT Industrial Ltd and the heater taken out of service.
- Check the casing for any signs of contact from the impeller. Any scuffs or marks made by the impeller should be reported to EXHEAT Industrial Ltd and the heater taken out of service.

Six-monthly Maintenance Inspections

The following should be undertaken every six months in addition to the maintenance inspections above:

Do not remove the terminal enclosure cover during wet or humid conditions as this could lead to a reduction in insulation resistance of the thermostat.

- Ensure the 5mm grub screws that affix the impeller to the motor are tight.
- Remove the fan guard and ensure the blades rotate unimpeded and that there remains a gap of at least 2mm all the way around.
- Isolate the electrical supply and remove the cover as per section 5.
- Internals should be clean, dry and free from debris, clean using a damp cloth.
- Ensure that electrical terminations are undamaged and secure.
- Measure the overall insulation resistance of the heater. Use a 500V dc Insulation Resistance Tester to take a reading between the earth and the phase terminals. The reading should be better than 2 megohm. If it is not, refer to section 4.
- Ensure that the gasket is in good condition and replace if required. Carefully refit the covers using only the fixings provided, as per section 5.
- Earth continuity must be maintained between all earth points and the main structure, ensure that any earth conductors are correctly and securely fitted between all earth points and main structure.

Annual Inspections and Long-Term Storage Inspections

Ensure that the following inspections are carried out if equipment is in storage or in use for a year or more:

- Maintain preservation as per Section 3
- Undertake the 6-monthly inspections as above.
- Inspect for low insulation resistance, as section 4.
- Only EXHEAT Industrial Ltd can undertake any replacements in hazardous area equipment, any unauthorised modifications will invalidate the hazardous area certification and any warranty.
- If equipment is being left unused for a period greater than three months, undertake the 6-monthly maintenance before energizing.
- Check for component failure in line with section 5, if there is component failure or low insulation resistance, contact EXHEAT Industrial Ltd for further advice.

Only EXHEAT Industrial Ltd or approved Services Representative are authorised to replace failed components. The hazardous area certification and warranty could be invalidated if this requirement is not strictly observed.

EXHEAT Maintenance

If you are unable to complete any of these maintenance checks, please contact EXHEAT Industrial Ltd to arrange for any of the relevant maintenance work to be undertaken.

If any problems are noted whilst maintenance checks are being carried out, please contact EXHEAT Industrial Ltd using the information provided at the beginning of this document.

8. Special Conditions for use

These conditions are in addition to those stipulated on the certificate that accompanies this manual.

In order to allow operation of this heater, please ensure that the following conditions for safe use are met:

- The heater must not be placed within 0.5m of any wall, structure or other obstruction to the air inlet (Impeller side), or outlet;
- The heater must not be covered in any way whilst in operation or until fully cooled after use;
- Before opening any enclosure, removing the fan guards or undertaking any maintenance, ensure the heater is fully de-energised and has been allowed to cool to ambient temperatures.
- Only EXHEAT Industrial Ltd supplied parts may be fitted to the heater, this includes bracketry and ducting.

Solid Obstacles

- Where the design of the MFH does not comply with table 11 of EN IEC 60079-1 15.3.1 listing minimum distance between flanged flamepath and obstruction, additional testing has been completed successfully. The minimum permissible obstruction to the flanged flamepath is 0.89mm.

9. Fault Finding, Correction and Spares

MFH Fan Assisted Heater

See Maintenance instructions for procedures relating to these faults.

Fault	Check	Resolution
Vibration	De-energise the heaters - Ensure that all feet are properly seated on the ground and that the heater is positioned on a clear and level surface. - Visually inspect the impeller and check for centralised revolution.	- Using a hand spanner, adjust the legs in turn until the heater sits on all four feet. - Remove the fan guards and casing lid and check that the impeller grub screws are tight.
The Impeller does not spin	Immediately isolate the heater from the power supply. - Inspect all electrical connections. - Open the Ex d enclosure and check if the MCB is in the open position.	- Tighten any loose connections. - Switch the MCB to the closed position.
The impeller spins clockwise (looking from fan end) (3 Phase heaters only)	Immediately isolate the heater from the power supply. - Access the Ex e enclosure and ensure that phase numbering is correct.	- Swap the cables between two of the incoming phases, L1 and L2 only.
There is no heat	Isolate the heater from the power supply. - Check the wiring of the heating elements. - Remove the element connection cable and check the resistance values of each phase.	Ensure you are using the correct wiring diagram in section 12. - Tighten any loose connections. - If an imbalanced reading is found, or an infinite value, contact EXHEAT Industrial Ltd.
The Heater suddenly de-energises	Immediately isolate the heater from the power supply. - Check the ambient has not exceeded 40°C. - Check for any signs of damage. - Check for any electrical fault. - Open the Ex d enclosure and check if the MCB is in the open position.	- Undertake a 6 monthly inspection of the equipment to ensure no fault. - Switch the MCB to the closed position.
A rattle or other unusual noise	Isolate the heater from the power supply. - Check all fasteners are tight. - Check for signs of scuffing between the impeller and casing.	- Using hand tools, tighten any loose fasteners. - Take out of service and contact Exheat Industrial Limited.

Spares

(Anything not mentioned below will require the unit to be sent back to manufacturer)

Failure Type	Meantime Between Failures	Estimated Replacement Time	Spares Lead Time
Replacement Feet	When Required	10 minutes	1 week
Impeller	When Required	45 minutes	1 week
RTD Temperature Sensor	When Required	60 minutes	1 week
Gaskets	When Required	Up to 2 hours	1 week
Handle / Lid	When Required	30 minutes	1 week

10. COSHH Statement

Health and Safety Information

There are no hazardous or toxic substances applied with this order as defined in COSHH (control of substances hazardous to health) regulations (2002).

11. General Arrangement Drawings

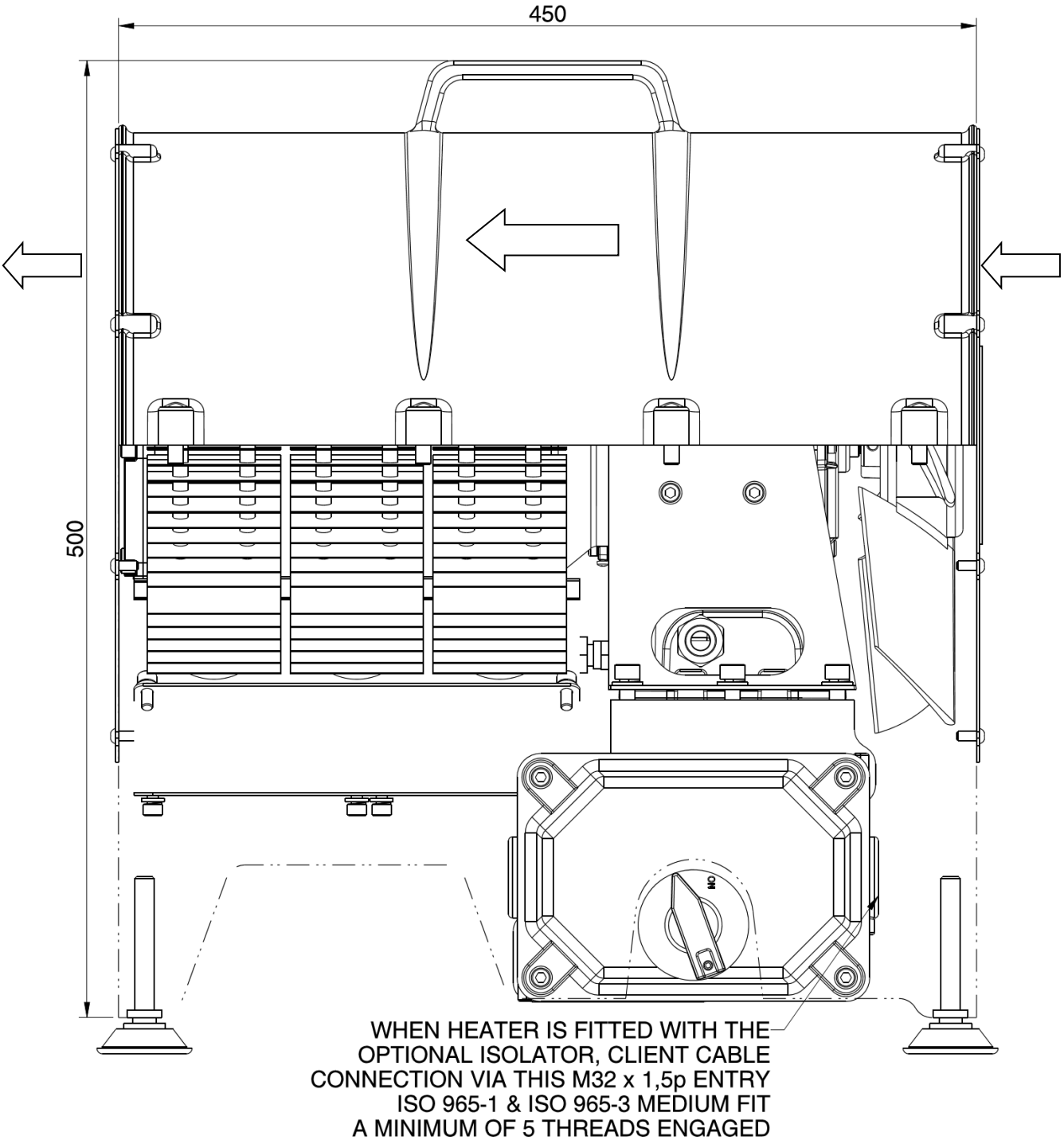

Fig 11.1 General arrangement drawing for both T3 and T4 MFH heaters when fitted with the optional local isolator.

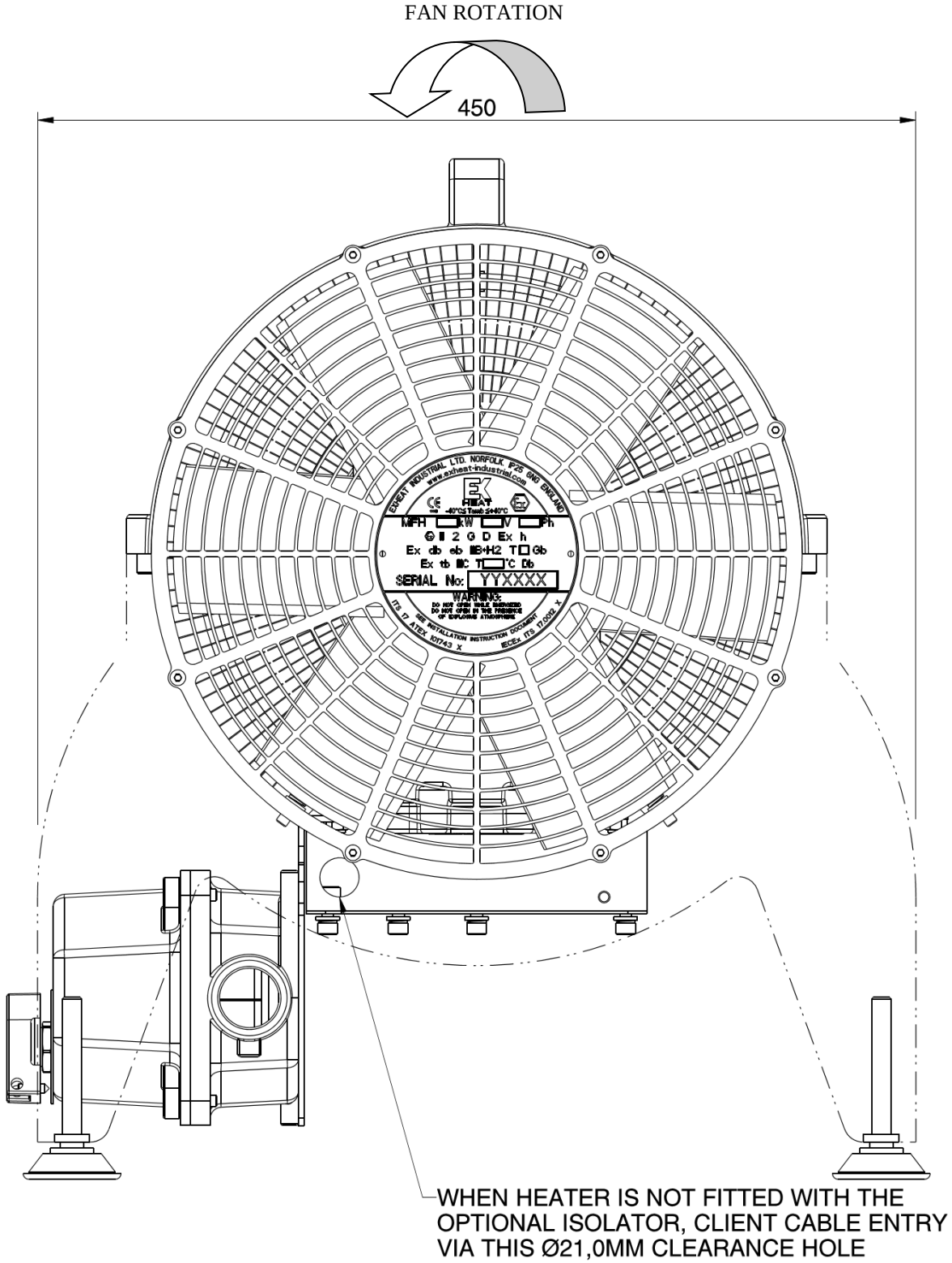

Fig 11.2 General arrangement drawing for both T3 and T4 MFH heaters when not fitted with the optional local isolator.

12. Wiring Diagrams

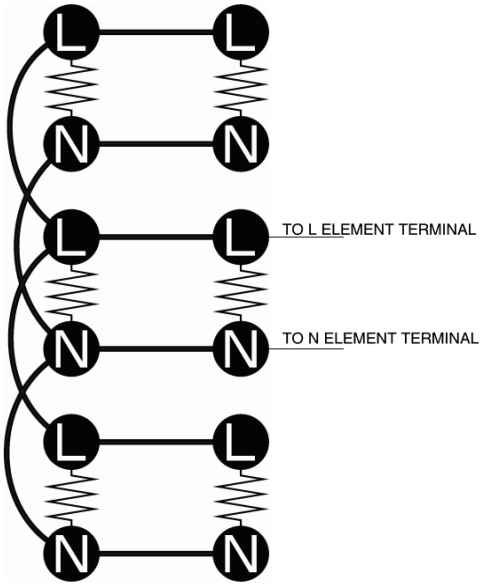

Fig. 12.1 Single Phase element wiring Diagram.

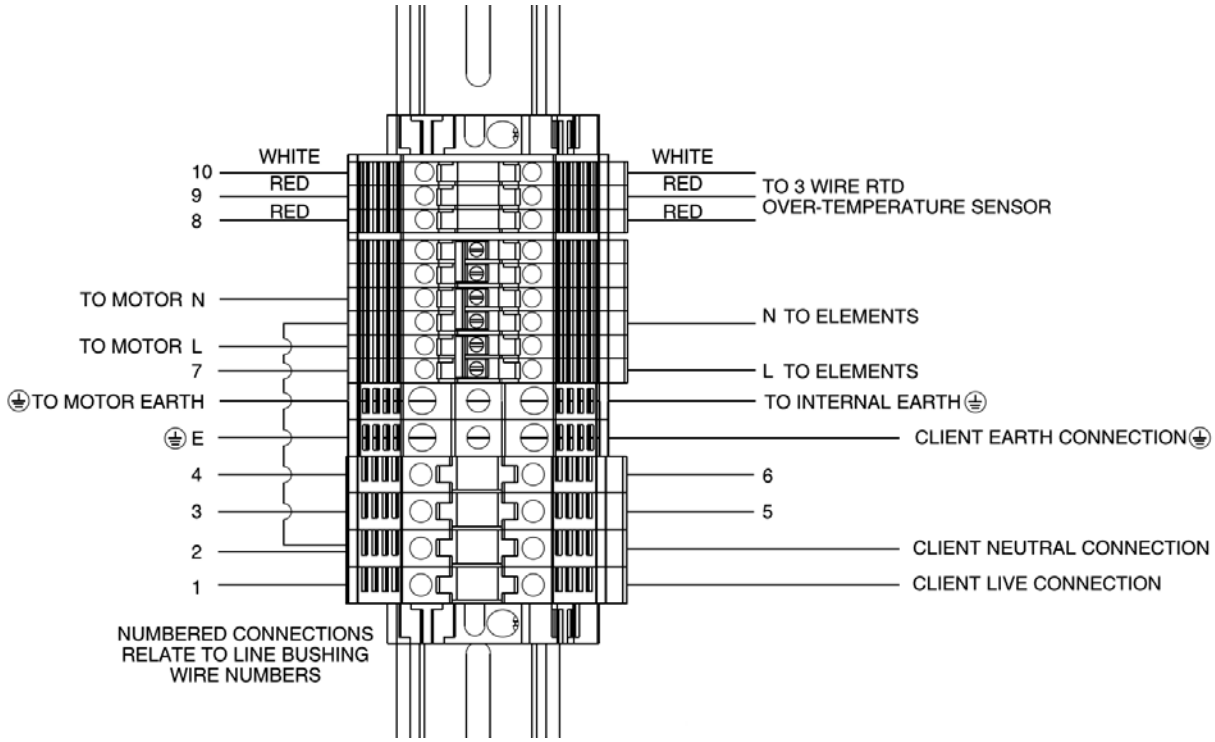

Fig. 12.2 Single Phase Ex e enclosure, terminal wiring Diagram. Connections to be made in accordance section 5 of this IOM.

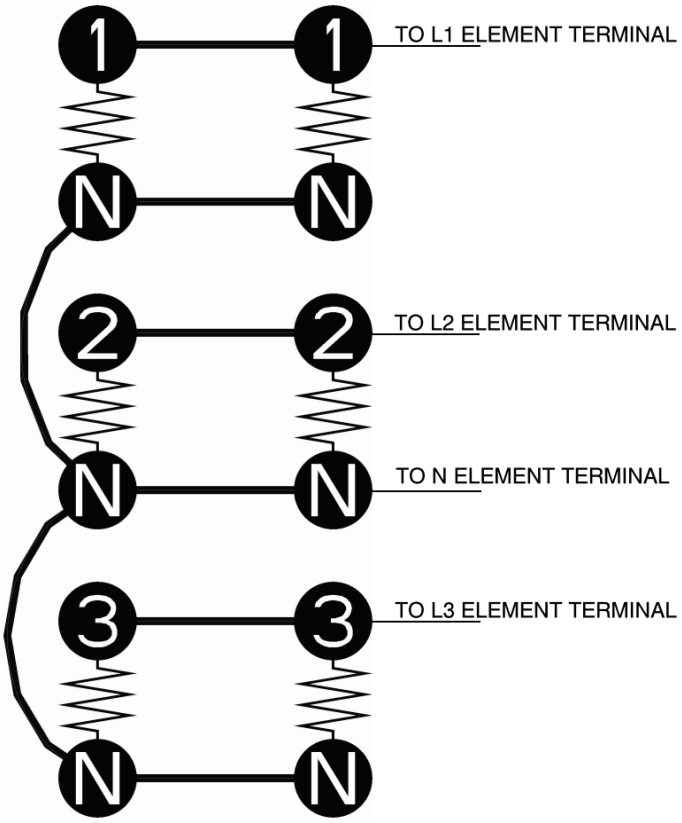

Fig. 12.3 Three Phase element wiring Diagram.

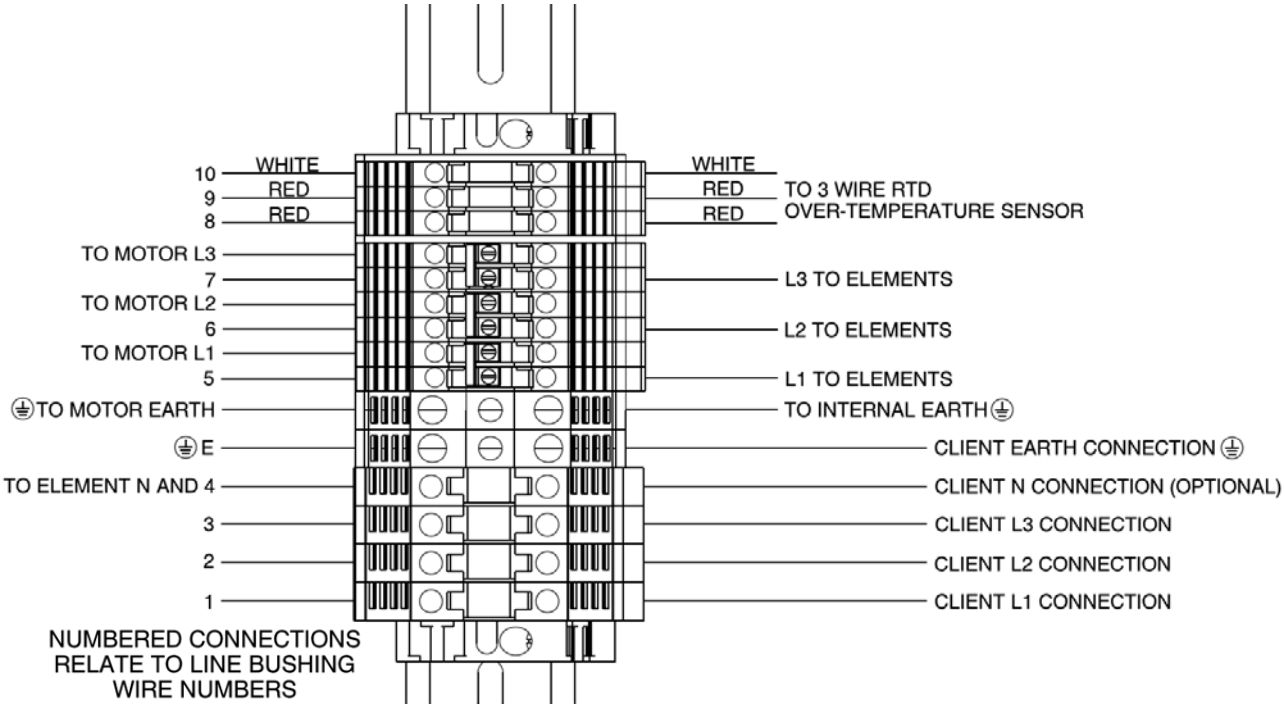

Fig. 12.4 Three Phase Ex e enclosure, terminal wiring Diagram. Connections to be made in accordance section 5 of this IOM.

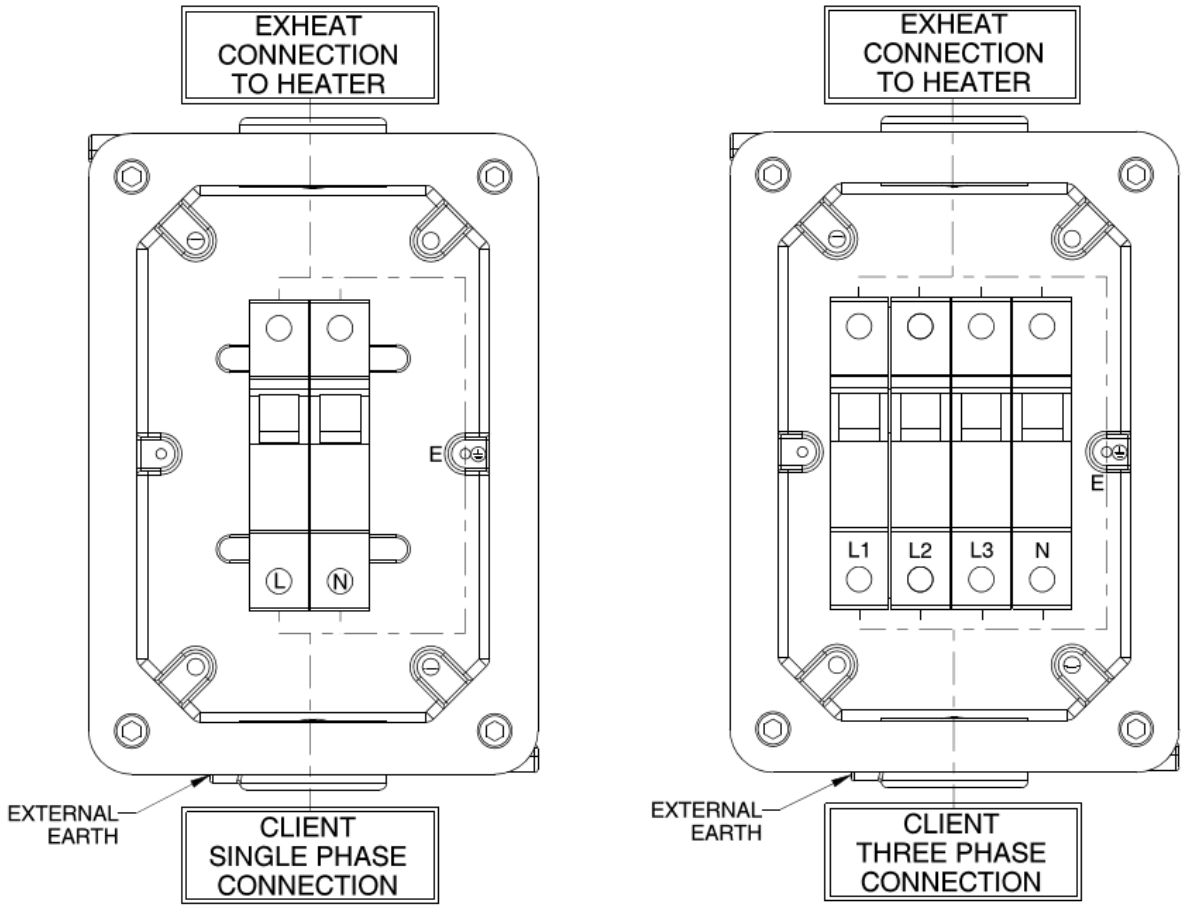

Fig. 12.5 & 12.6 Wiring diagrams for single phase and three phase MFH heaters fitted with the optional local isolator.

13. Routine Maintenance Inspection Record

EXHEAT Industrial Ltd
Threxton House
Threxton Road Ind. Est.
Watton, Thetford, Norfolk
IP25 6NG, United Kingdom
Tel: +44 (0) 1953 886 210
Fax: +44 (0) 1953 883 853
www.exheat-industrial.com

ROUTINE MAINTENANCE INSPECTION RECORD

MFH Fan Assisted Heater

Serial No	
Description	
PO No	
Reference No	

Inspection Checklist		**Status Code**	**Name**	**Date**	**Comment**
	6 Monthly Inspection				
01	Check equipment for external damage or signs of deterioration.				
02	Check for dust build up or restricted air flow.				
03	Check that impeller fittings are tight.				
04	Check the impeller can spin unimpeded and that there is at least 2mm clearance between blades and casing.				
05	Clean the casing and impeller blades with a damp cloth.				
06	Check that there is no dirt, debris, loose items or moisture within the terminal enclosure				
07	Check that all electrical connections are undamaged and tight including any spare unused terminals.				
08	Check the heaters/elements insulation resistance				
09	Check that enclosure gaskets are undamaged and fitted correctly				
10	Check that earth conductors are correctly fitted and undamaged				
	12 Monthly Inspection (in addition to 6 Monthly Inspections)				
01	Check resistance values, including individual element resistance if it's down on IR				
	Motor Maintenance				
01	3000 hours operation inspection of radial seal and re-application of grease.				

Carry out the inspection in accordance with relevant standards concerning inspection and maintenance of electrical installations in non-hazardous or hazardous areas whichever is applicable.

Verified	**Installation**	**Energised**	**EXHEAT Industrial Ltd**
Name			
Signature			
Date			

14. Certification Documentation

IECEx Certificate of Conformity

INTERNATIONAL ELECTROTECHNICAL COMMISSION
IEC Certification Scheme for Explosive Atmospheres

for rules and details of the IECEx Scheme visit www.iecex.com

Certificate No.: IECEx ITS 17.0012X

Issue No: 1

Certificate history:
Issue No. 1 (2018-06-11)
Issue No. 0 (2017-10-13)

Status: **Current**

Date of Issue: **2018-06-11**

Applicant: **ExHeat Industrial Ltd**
Thexton House,
Thexton Road Industrial Estate,
Walton,
Thetford,
Norfolk,
IP25 6NG
United Kingdom

Equipment: **MFH T3 & MFH T4 Portable Fan Heater**

Optional accessory: *Ducting*

Type of Protection: **Flameproof, Increased Safety**

Marking:

Ex db eb IIB+H2* T3...T4 Gb

Ex tb IIIC T200°C...T135°C Db IP65

-40°C ≤ Ta ≤ +40°C

*Can be marked IIB only

Approved for issue on behalf of the IECEx Certification Body: P Moss

Position: Certification officer

Signature:
(for printed version)

Date:

1. This certificate and schedule may only be reproduced in full.
2. This certificate is not transferable and remains the property of the issuing body.
3. The Status and authenticity of this certificate may be verified by visiting the Official IECEx Website.

Certificate issued by:

Intertek Testing & Certification Limited
ITS House, Cleeve Road,
Leatherhead,
Surrey, KT22 7SA
United Kingdom

IECEx Certificate of Conformity

Certificate No: IECEx ITS 17.0012X Issue No: 1

Date of Issue: **2018-06-11**

Manufacturer: **ExHeat Industrial Ltd**
Thexton House,
Thexton Road Industrial Estate,
Walton,
Thetford,
Norfolk,
IP25 6NG
United Kingdom

Additional Manufacturing location(s):

This certificate is issued as verification that a sample(s), representative of production, was assessed and tested and found to comply with the IEC Standard list below and that the manufacturer's quality system, relating to the Ex products covered by this certificate, was assessed and found to comply with the IECEx Quality system requirements. This certificate is granted subject to the conditions as set out in IECEx Scheme Rules, IECEx 02 and Operational Documents as amended.

STANDARDS:

The apparatus and any acceptable variations to it specified in the schedule of this certificate and the identified documents, was found to comply with the following standards:

IEC 60079-0 : 2011 Edition:6.0	Explosive atmospheres - Part 0: General requirements
IEC 60079-1 : 2014-06 Edition:7.0	Explosive atmospheres - Part 1: Equipment protection by flameproof enclosures "d"
IEC 60079-31 : 2013 Edition:2	Explosive atmospheres - Part 31: Equipment dust ignition protection by enclosure "t"
IEC 60079-7 : 2015 Edition:5.0	Explosive atmospheres – Part 7: Equipment protection by increased safety "e"

*This Certificate **does not** indicate compliance with electrical safety and performance requirements other than those expressly included in the Standards listed above.*

TEST & ASSESSMENT REPORTS:

A sample(s) of the equipment listed has successfully met the examination and test requirements as recorded in

Test Report:

GB/ITS/ExTR16.0053/00 GB/ITS/ExTR16.0053/01 GB/ITS/ExTR16.0053/02

Quality Assessment Report:

FR/LCI/QAR06.0005/10

IECEx Certificate of Conformity

Certificate No: IECEx ITS 17.0012X Issue No: 1

Date of Issue: **2018-06-11**

Schedule

EQUIPMENT:

Equipment and systems covered by this certificate are as follows:

The MFH Portable Fan Heater is to be used to raise the temperature within a room or local area, by operating at its rated voltage and duty when required (See Table 1 for operating ratings in Appendix).

The MFH portable fan heater consists of a polymer outer housing, manufactured from either Durafide 2130A1 PPS 30% or Latishield 66-08A G/25-VOKB1, which protects a motor with impeller, flameproof enclosure, increased safety enclosure and electric heater elements. The overall dimensions of the fan casing are no greater than 550 x 500x 500mm. The Impellers are built up with an epoxy coated cast aluminium hub with Latishield 66-08A G/25-VOKB1 PA66 blades.

Certified Finned tubular type heating elements are positioned in the air flow and are energised only when the motor is in operation.

The MFH portable fan heater is electrically rated up to 6000W, 690VAC, 4 Wire Poly-phase & 277VAC 2 Wire Single Phase. The equipment has a balance grade of BV3 and is designed to operate in an ambient temperature range of -40°C to +40°C.

The MFH portable fan heater has the option to include their multipurpose enclosure, which is covered by certificate IECEx ITS 17.0025X.

Non-Electrical assessment completed for the MFH Portable Fan Heater does not cover ISO 80079-36 or ISO 80079-37.

SPECIFIC CONDITIONS OF USE: YES as shown below:

- Use only suitably approved Ex db eb IIB+H2 Gb/Ex tb IIIC Db minimum rated cable glands with a minimum ambient range of -40°C to +40°C.
- Yield stress of the fasteners used on the flameproof enclosure shall be ≥450MPa.
- Joints on flameproof enclosure are not to be repaired.
- Line bushing cable shall be suitably rated to -40°C or better.
- Line bushing cable shall be suitably rated for +50.2°C of better

IECEx Certificate of Conformity

Certificate No:	IECEx ITS 17.0012X	Issue No: 1
Date of Issue:	**2018-06-11**	Page 4 of 4

DETAILS OF CERTIFICATE CHANGES (for issues 1 and above):

Issue 01 -

Variation to remove limit of 32A from the equipment description. This has no effect on the technical aspect of the certification due to the thermal rise tests being conducted using the maximum power range.

No change to controlled documents.

Added 2 Specific Conditions of Use which were missing off Issue 00.

Annex:

Annex doc for IEC Ex C of C or TR.pdf

IECEx Certificate of Conformity

Certificate No:	IECEx ITS 17.0012X	Issue No. 0
Annex No. 1		

Routine testing:

- Each Fan heater Ex e enclosure shall be subjected to a dielectric strength test of 1000V + (2xRated Voltage (rms)) applied between Live/Neutral and Case and Element Connections and Case for a period of 60s each. Alternatively, a test shall be carried out at 1.2 times the test voltage, maintained for at least 100ms.
  Results must be recorded.

Manufacturer's documents			
Title:	Drawing No.:	Rev. Level:	Date:
MFH Portable Fan Heater General Arrangement ATEX & IECEx Certification Drawing	2004-99-01	2	21/06/17
MFH Portable Fan Heater Earthing Diagram ATEX & IECEx Certification Drawing	2004-99-05	2	21/06/17
MFH Portable Fan Heater Connection Data	2004-99-06	2	21/06/17
MFH Portable Fan Heater Impeller Fitting Diagram ATEX & IECEx Certification Drawing	2004-99-07	2	21/06/17
MFH Portable Fan Heater EXD Enclosure Housing ATEX & IECEx Certification Drawing	2004-99-24	2	21/06/17
MFH Portable Fan Heater EXE Enclosure Housing ATEX & IECEx Certification Drawing	2004-99-25	2	21/06/17
MFH Portable Fan Heater EXD Enclosure Housing ATEX Certification Drawing	2004-99-26	2	21/06/17
MFH Portable Fan Heater Nameplate Drawing ATEX & IECEx Certification Drawing	2004-99-42	2	21/06/17
Installation, Operation and Maintenance Manual	2004-99-IOM	2	21/06/17

Certificate issued by:

Intertek Testing & Certification Limited
ITS House, Cleeve Road,
Leatherhead,
Surrey, KT22 7SB
United Kingdom

Total Quality. Assured.

IECEx Certificate of Conformity

Certificate No:	**IECEx ITS 17.0012X**	**Issue No. 0**
Annex No. 1		

Table 1 – Operating Parameters

<table>
<tr><td colspan="5">Table 1</td></tr>
<tr><td colspan="5">MFH Portable Fan Heater Range</td></tr>
<tr><td rowspan="6">The Heater Range</td><td colspan="4">Temperature Classification</td></tr>
<tr><td colspan="2">T4</td><td colspan="2">T3</td></tr>
<tr><td>Voltage</td><td>Duty</td><td>Voltage</td><td>Duty</td></tr>
<tr><td>110</td><td>2.5kW</td><td rowspan="2">220
240
380
415</td><td rowspan="2">5.5kW</td></tr>
<tr><td>220
240
380
415</td><td>2.75kW</td></tr>
<tr><td>120
230
254
277
400
440
480</td><td>3kW</td><td rowspan="2">230
254
277
400
440
480
600
690</td><td rowspan="2">6kW</td></tr>
<tr><td>600
690</td><td>3.7kW</td></tr>
<tr><td rowspan="5">Performance Data</td><td></td><td colspan="2">50 Hz</td><td>60 Hz</td></tr>
<tr><td>Air Flow</td><td colspan="2">1050 m^2/hr</td><td>1260 m^2/hr</td></tr>
<tr><td>Face Air Velocity</td><td colspan="2">3.6 m/s</td><td>4.3 m/s</td></tr>
<tr><td>Fan Speed</td><td colspan="2">1380 rpm</td><td>1460 rpm</td></tr>
<tr><td>Motor Rating</td><td colspan="2">0.09 kW</td><td>0.09 kW</td></tr>
</table>

Certificate issued by:

Intertek Testing & Certification Limited
ITS House, Cleeve Road,
Leatherhead,
Surrey, KT22 7SB
United Kingdom

Total Quality. Assured.

EU-Type Examination Certificate

1. **EU-TYPE EXAMINATION CERTIFICATE**

2. **Equipment or Protective System Intended for use in Potentially Explosive Atmospheres Directive 2014/34/EU**

3. **EU-Type Examination Certificate Number: ITS17ATEX101743X Issue 02**

4. **Product:** MFH Portable Fan Heater

5. **Manufacturer:** ExHeat Industrial Ltd

6. **Address:** Thexton House, Thexton Road Industrial Estate, Watton, Thetford, Norfolk, IP25 6NG. UK.

7. This product and any acceptable variation thereto is specified in the schedule to this certificate and the documents therein referred to.

8. Intertek Testing and Certification Limited, Notified Body number 0359 in accordance with Article 17 of Directive 2014/34/EU of the European Parliament and of the Council dated 26 February 2014, certifies that the product has been found to comply with the Essential Health and Safety Requirements relating to the design and construction of products intended for use in potentially explosive atmospheres given in Annex II to the Directive.

   The examination and test results are recorded in confidential Intertek Report Ref 102594083CHE-008 dated April 2017, 102594083CHE-009 dated March 2017, 103116115CHE-002 dated September 2017, 103116115CHE-001 dated October 2017 and G103547229 Dated 11 June 2018.

9. Compliance with the Essential Health and Safety Requirements has been assured by compliance with EN 60079-0:2011+A11:2013, EN 60079-1:2014, EN 60079-7:2015, EN 60079-31:2014, EN 80079-36:2016, EN 80079-37:2016, EN 14986:2007 except in respect of those requirements referred to at item 16 of the Schedule.

10. If the sign “X” is placed after the certificate number, it indicates that the product is subject to Specific Conditions of Safe Use specified in the Schedule to this certificate.

11. This EU-Type Examination Certificate relates only to the design and construction of the specified product. Further requirements of the Directive apply to the manufacturing process and supply of this product. These are not covered by this certificate.

12. The marking of the product shall include the following:

    II 2 G Ex h Ex db eb IIB+H2* T3...T4 Gb
    II 2 D Ex tb IIIC T200°C...T135°C Db IP65
    -40°C ≤ Ta ≤ +40°C

    *Can also be marked IIB only.

Intertek Testing & Certification Limited
Intertek House, Cleeve Road, Leatherhead, Surrey, KT22 7SB
Tel: +44 (0)1372 370900 Fax: +44 (0)1372 370977
www.intertek.com

P Moss
Certification Officer
11 June 2018

Registered No 3272281 Registered Office: Academy Place, 1-9 Brook Street, Brentwood, Essex, CM14 5NQ.

SCHEDULE

EU-TYPE EXAMINATION CERTIFICATE NUMBER ITS17ATEX101743X Issue 02

13. Description of Equipment or Protective System

The MFH Portable Fan Heater is to be used to raise the temperature within a room or local area, by operating at its rated voltage and duty when required (See Table 1 for operating ratings).

The MFH portable fan heater consists of a polymer outer housing, manufactured from either Durafide 2130A1 PPS 30% or Latishield 66-08A G/25-VOKB1, which protects a motor with impeller, flameproof enclosure, increased safety enclosure and electric heater elements. The overall dimensions of the fan casing are no greater than 550 x 500 x 500mm. The Impellers are built up with an epoxy coated cast aluminium hub with Latishield 66-08A G/25-VOKB1 PA66 blades.

Certified Finned tubular type heating elements are positioned in the air flow and are energised only when the motor is in operation.

The MFH portable fan heater is electrically rated up to 6000W, 690VAC, 4 Wire Poly-phase & 277VAC 2 Wire Single Phase. The equipment has a balance grade of BV3 and is designed to operate in an ambient temperature range of -40°C to +40°C.

Table 1

MFH Portable Fan Heater Range

The Heater Range	Temperature Classification			
	T4		**T3**	
	Voltage	Duty	Voltage	Duty
	110	2.5kW	220 240 380 415	5.5kW
	220 240 380 415	2.75kW		
	120 230 254 277 400 440 480	3kW	230 254 277 400 440 480 600 690	6kW
	600 690	3.7kW		

Performance Data		50 Hz	60 Hz
	Air Flow	1050 m^2/hr	1260 m^2/hr
	Face Air Velocity	3.6 m/s	4.3 m/s
	Fan Speed	1380 rpm	1460 rpm
	Motor Rating	0.09 kW	0.09 kW

SCHEDULE

EU-TYPE EXAMINATION CERTIFICATE NUMBER ITS17ATEX101743X Issue 02

14. Report Number

Intertek Report Ref 102594083CHE-008 dated April 2017, 102594083CHE-009 dated March, 103116115CHE-002 dated September 2017, 103116115CHE-001 dated October 2017 and G103547229 Dated 11 June 2018

15. Special Conditions of Certification

(a). Specific Conditions of Safe Use

- Use only suitably approved Ex db eb IIB+H2 Gb/Ex tb IIIC Db minimum rated cable glands with a minimum ambient range of -40°C to +40°C.
- Yield stress of the fasteners used on the flameproof enclosure shall be ≥450MPa.
- Joints on flameproof enclosure are not to be repaired.

(b). Conditions of Manufacture

- Each Fan heater Ex e enclosure shall be subjected to a dielectric strength test of 1000V + (2xRated Voltage (rms)) applied between Live/Neutral and Case and Element Connections and Case for a period of 60s each. Alternatively, a test shall be carried out at 1.2 times the test voltage, maintained for at least 100ms. Results shall be recorded.
- Line bushing cable shall be suitably rated to -40°C or better.
- Line bushing cable shall be suitably rated for +50.2°C of better

SCHEDULE

EU-TYPE EXAMINATION CERTIFICATE NUMBER ITS17ATEX101743X Issue 02

16. Essential Health and Safety Requirements (EHSRs)

The relevant Essential Health and Safety Requirements (EHSRs) have been identified and assessed in Intertek Report Ref: 102594083CHE-008 dated April 2017, 102594083CHE-009 dated March 2017 and 102594083CHE-008 dated April 2017, 102594083CHE-009 dated March 2017, 103116115CHE-002 dated September 2017 and 103116115CHE-001 dated October 2017.

17. Drawings and Documents

Title:	Drawing No.:	Rev. Level:	Date:
MFH Portable Fan Heater General Arrangement ATEX & IECEx Certification Drawing	2004-99-01	2	21/06/17
MFH Portable Fan Heater Earthing Diagram ATEX & IECEx Certification Drawing	2004-99-05	2	21/06/17
MFH Portable Fan Heater Connection Data	2004-99-06	2	21/06/17
MFH Portable Fan Heater Impeller Fitting Diagram ATEX & IECEx Certification Drawing	2004-99-07	2	21/06/17
MFH Portable Fan Heater EXD Enclosure Housing ATEX & IECEx Certification Drawing	2004-99-24	2	21/06/17
MFH Portable Fan Heater EXE Enclosure Housing ATEX & IECEx Certification Drawing	2004-99-25	2	21/06/17
MFH Portable Fan Heater EXD Enclosure Housing ATEX Certification Drawing	2004-99-26	2	21/06/17
MFH Portable Fan Heater Nameplate Drawing ATEX & IECEx Certification Drawing	2004-99-42	2	21/06/17
Installation, Operation and Maintenance Manual	2004-99-IOM	2	21/06/17

* Denotes the drawings which have changed as part of this certificate issue.

SCHEDULE

EU-TYPE EXAMINATION CERTIFICATE NUMBER ITS17ATEX101743X Issue 02

18. Details of Certificate Change Issue 01

To permit:
The use of ExHeat Industrials Ltd certified “Ex db” multipurpose enclosure on the MFH Portable Fan Heater covered by certificate number ITS17ATEX101944X; to update drawings to include the use of the “Ex d” multipurpose enclosure and also to include the option for ExHeat to supply IIB only rated MFH Portable Fan Heaters.

Drawing numbers have also been amended.

Report Number

Intertek Report Ref: 103116115CHE-001 Dated October 2017

Details of Certificate Change Issue 02

To permit:
The remove limit of 32A from the equipment description. This has no effect on the technical aspect of the certification due to the thermal rise tests being conducted using the maximum power range.
No change to controlled documents.

www.exheat-industrial.com

Edition 7 (June 2019)

Author: J. Brown

MFH-IOM_English

Refer to EXHEAT Industrial Ltd website for latest edition. (www.exheat-industrial.com/product)